군번 GROUP NO.	품번 ITEM	품 명 DESCRIPTION	사 양 SPEC	도 면 번 호 DWG NO.	-	품번 및 군번	중량 . 길이 폭 x 길이	표 면 처 리 S/TREATMENT
1								
2	1	36P PLUG(RUBBER COUPLING)	FRITS4106RGG36-35SB0PG36F6/NEXUS					
2	2	ADAPTER-PG36	M8BSM36P36					
1	3	CONDUIT TUBE	RLTPC36B,PA12					
2	4	GASKET	ASSY,t=1.8					
2	5	NAME LABEL	304SS,t=0.5(MAX.)					

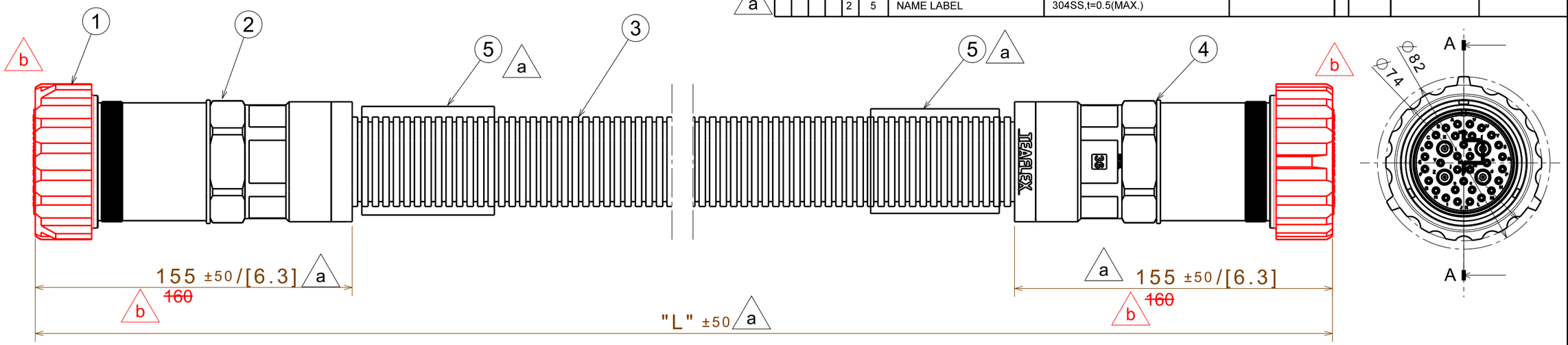

NOTE.
1. KIND OF CONNECTOR
 - Straight plug supplied with PG36 adapter
2. TECHNICAL CHARACTERISTICS
 - Arrangement : 36-35
 - Contacts: 4 size8 coax type contacts for RG59
  32 size 16 pin crimp contacts
 - Working voltage: 700Vdc,500Vac
 - Test voltage: 2,000Vac
 - Current rating: size8 = 73A at 20℃
  size16 = 22A at 20℃
 - Working temperature: (-55~+125)℃
 - IP rating (coupled connector): IP67
3. MATERIAL AND FINISH
 Contacts:
  -copper alloy
  -gold plating
 Inserts:
  -fire-resistant ethylene acrylic rubber
 Metallic parts:
  -aluminium alloy
  -electrodeposition of black paint(F6)
4. WEIGHT : 4.14kg
5. Non-assignment connector sockets/pins
 should be filled with sealing plug.
 (Signal pin : 10-305045-16
 Coaxial pin : 10-305045-8, GLENAIR)

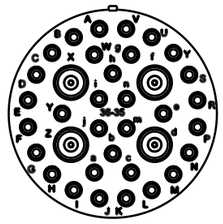

JUMPER COUPLER PIN ASSIGNMENT

NO.	ITEM	TLC	NO.	ITEM	TLC
A	PEI1 LIVE ADD	84L01	a		
B	PEI2 LIVE ADD	84L02	b		
C	PEI3 LIVE ADD	84L03	c		
D	PEI4 LIVE ADD	84L04	d		
E	PEI5 LIVE ADD		e		
F	PEI6 LIVE ADD		f	~~VIDEO OUT~~	~~COAXIAL(L)~~
G	PEI7 LIVE ADD		g		
H	PEI8 LIVE ADD		h		
I	PEI LIVE ADD GND	84L09	i		
J	DPO LIVE ADD1	84L30	j		
K	DPO LIVE ADD2	84L31	m		
L	DPO LIVE ADD GND	84L32	n		
M					
N					
P					
R					
S					
T	DPH LIVE ADD1	84L38			
U	DPH LIVE ADD2	84L39			
V	DPH LIVE ADD GND	84L40			
W					
X	VIDEO IN	COAXIAL(R)			
Y					
Z	VIDEO OUT	COAXIAL(L)			

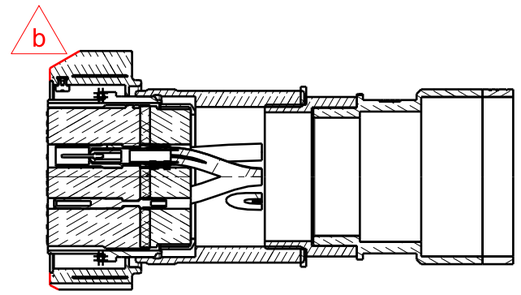

Section view A-A
Scale: 1:2

	DIMENSION
"L"	4,200 +/- 50 [165.35 +/- 1.96] APPROX ~~3,200 +/- 50 [125.98 +/- 1.96]~~

개정 CHANGE				
1)Weight & Sealing plug added. 2)DIM'S changed. 3)P/No.5 added. 4)JCR pin assignment added. 2012.03.12	H.Y.SHIN	APP	B.J.JONE	a
Coupling shape & Dim's changed.(was 160mm) 2012.10.23	H.Y.SHIN	APP	B.J.JONE	b
Pin No. changed. 2012.11.19	H.Y.SHIN	APP	B.J.JONE	c
Jumper cable length changed. (was 3,200mm) 2013.04.08	H.Y.SHIN	APP	B.J.JONE	d

GENERAL TOLERANCE (WMS-C-40201)

DIMENSION	WELDING	MACHING
0.5 ~ >6mm	±0.3	±0.1
6 ~ >30mm	±0.5	±0.2
30 ~ >120mm	±0.8	±0.3
120 ~ >400mm	±1.2	±0.5
400 ~ >1000mm	±2.0	±0.8
1000 ~ >2000mm	±3.0	±1.2
2000 ~ >4000mm	±4.0	±2.0
4000 ~ >5000mm	±5.0	±3.0
5000 ~ >8000mm	±7.0	±5.0
8000 ~ >12500mm	±9.0	±7.0
12500 ~ >22450mm	±12.0	±9.0

DIMENSION	CASTING
~ >120mm	±2.0
120 ~ >315mm	±2.5
315 ~ >630mm	±3.5
630 ~ >1250mm	±5.0
1250 ~ >2500mm	±7.0
2500 ~ >5000mm	±10.0

설계MEMO

공차 적용기준 : WMS C 40201

DIM. IN mm	작성일 DATE	2011.10.07	승인 APPROVED
척도 SCALE	작성 DRAWN	B.H.KANG	B.J.JONE
1 / 2	설계 DESIGNED	-	
	검토 CHECKED	J.Y.LEE	

WOOJIN Industrial Systems Co., Ltd.

DENVER RTD FASTRACKS

JUMPER COUPLER PLUG

R1D1473-25868 d